TECHNICAL DRAWING

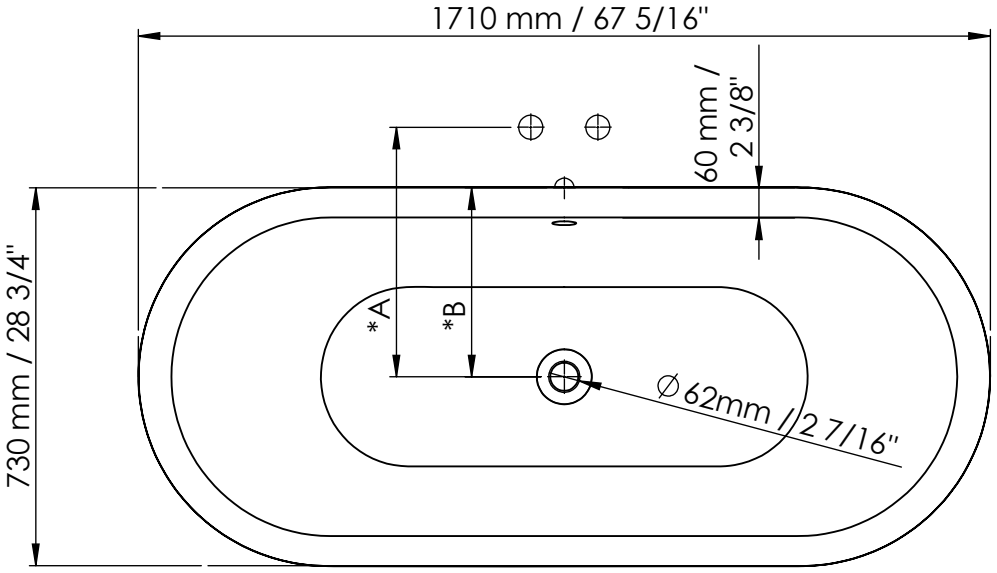

*A: c/c Waste to Tap Feed
- DAD1740 Mull Classic Bath & Shower Mixer with Dad1207 H-Stand: approx 425 mm / 16 3/4"
- DAD1840 Chessleton Floor Standing Bath & Shower Mixer: approx 425 mm / 16 3/4"
- DAD1683 Leawood Floor Standing Bath & Shower Mixer: approx 430 mm / 16 15/16"

* B: c/c Waste of Overflow: approx 360mm / 14 3/16"

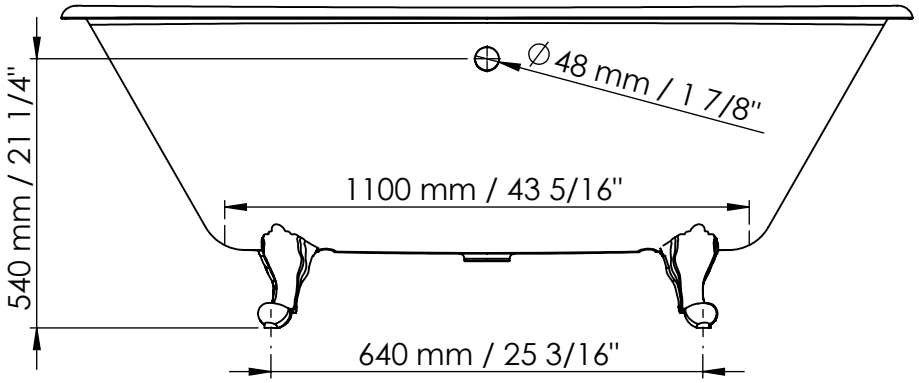

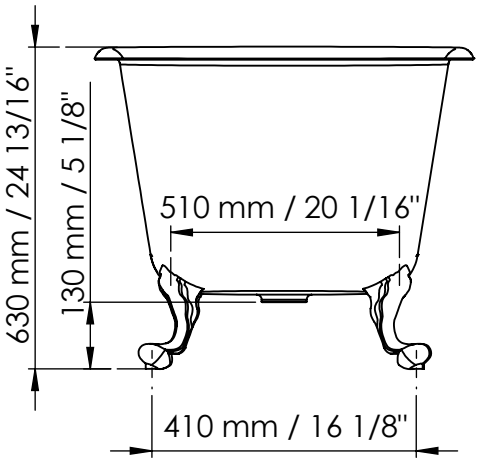

Bath Measure-ments	Metric	Imperial
Length	1710mm	67 5/16”
Width	730mm	28 3/4”
Height	630mm	24 13/16”
Weight	154 kg	339 lbs
Capacity	220 Litres	58 gal
Total Weight (Inc Water)	374 kg	825 lbs

Note: Due to handmade processes size & weight can vary up to 5%

DELIVERY & STORAGE INSTRUCTIONS

TAKING DELIVERY OF YOUR PRODUCTS

- Sign for delivery confirming the number of pallets/boxes received and move products into property or storage area
- Open boxes and wooden crates and check that all components are included in accordance with product drawing
- Check for any damage to the products that may have occurred during transportation
- In accordance with our terms and conditions, report in writing, any damage or missing products within 3 days of delivery.

PROTECTING YOUR PRODUCTS ON SITE

- Taps and fittings should be stored in their original packaging, in a clean and dry environment, at normal room temperature. After inspection, please ensure products are clean and dry before returning to original packaging.
- Baths should be removed from their wooden crate and stored in a clean environment at normal room temperature. It is very important to protect the bath from damage, in particular the interior enamelled surface and exterior polished surface. Do not put any masking tape onto the exterior of the bath.
- Towel rails should be removed from their wooden crate and stored in a clean, dry environment at normal room temperature. It is very important that the plated surface of the towel rail is kept clean and dry. Dust, dirt or moisture that is allowed to sit on the plated surface will result in tarnishing, which can permanently damage the product invalidating the guarantee.
- China sanitaryware should be stored in its original packaging and protected against breakage.
- Marble should be removed from the wooden crate for inspection and then stored in a clean environment on its long edge, making sure that it is protected against damage.
- Please follow the care instructions below if you need to clean the products being careful not to use any abrasive or chemical cleaners.

PREPARING FOR INSTALLATION

- All water fittings should only be installed by a qualified plumbing engineer and comply with current water regulations. Products and connections should remain accessible for routine maintenance. We recommend that isolation and non-return valves are fitted in all installations where appropriate.
- For some of Drummonds' products, in particular cast iron baths, you will need to ensure that you have sufficient people on site to help with the careful lifting of the product.
- Read and follow the installation instructions below and check that you have all of the parts and tools required to install the product properly.
- Drummonds offer a selection of pipework fittings kits to ensure that all visible feeder and waste pipes are installed in the same finish as your Drummonds product. Please contact us if you require assistance specifying the correct kit, which can be delivered in advance of your main order to tie in with your plumbing engineer's first fix.
- Take all necessary precautions to ensure that all parts are properly protected during, and after, installation. Polished and plated surfaces are particularly prone to damage from dirty and incorrect tools; spanners should be suitably lined so as to not damage plated or polished nuts.
- Drummonds' products are designed to operate at up to 3 bar water pressure. Where water pressure exceeds 3 bar, we suggest pressure reducing valves are fitted. For optimum performance, hot and cold water pressure should be correctly balanced.
- To avoid damage to tap or shower cartridges flush your existing hot and cold water system to ensure there is no debris or dirt in the existing pipework prior to commencing installation.
- A build-up of limescale is inevitable on all water fittings and, for hard water areas, we recommend the fitting of a suitable water treatment device.
- When using sealant, only a suitable neutral curing sealant should be used.
- After installation, please ensure the product is operating correctly, that it is clean (in accordance with cleaning instructions below) and protected until completion of all works in the property.

BATHS WITH FEET

Weight

- For details of the bath weight, please refer to the technical drawing on page 1 of this document
- The weight of baths with feet is concentrated on the four feet. You may want to consider extra support for this
- If you have any concerns regarding the weight of the bath, please consult your builder or structural engineer

Floor Structure

- Waste fittings can be above or below the floor, for bath with feet
- Concrete Floors: If you are installing onto a concrete floor there are a few options. You can either channel the pipework into the concrete, preset the pipes into the floor (depending on stage of building work) or raise the bath on a plinth
- Other Floors: Please refer to the bath waste manual to ensure that the floor void is sufficient for installation. The waste should ideally be fitted whilst access under the floor is still possible. You may want to consider a flexible connection to the waste.
- Above the floor: Please refer to the bath waste & overflow manual

Bath Waste

- Bath with feet are compatible with all Drummonds Waste units.
- Refer to the technical drawing above for first fix position of the waste pipe
- Please refer to the bath waste manual for further information

Taps & Fillers

- Refer to the technical drawing for first fix position of the tap feeds
- For additional information on bath taps, please refer to the particular product manual

#	Name	Qty
01	Bath	1
02	Feet	4
03	Levelling Bolt	4
04	Bolt M10 x 25	4

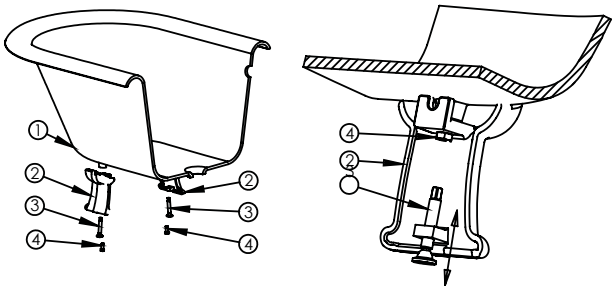

Installing feet

1. A clear area must be prepared with a protective surface in order to fit the feet. Remove the bath and feet from the wooden crate and place the bath face down upon the protective surface. Using the diagrams above attach the feet to the bath.

2. The feet are individually numbered to match its specific position on the bath. Attach the feet (2) to the bath with bolts (4) as per the diagram ensuring that the feet are secure. Attach the leveling bolts (4).

3. Turn the bath over but take care not to place strain on any of the feet until the bath is ready to be lowered down onto all four feet equally.

4. Use the leveling bolts to set the bath level, note that the bath must be set so that no water remains in the bath once drained.

5. Place the bath in the required position to enable positions to be marked for supply and waste pipes.

6. Remove the bath to a safe area where the bath will not be damaged and make provision for the connections that the installation requires.

7. Reinstate the bath and attach products as required, instructions are supplied seperately

POST INSTALLATION CHECKS

- After installation is complete, run the system to check for any leaks
- Leave all surfaces and products clean, dry and well protected until all work is completed on site

CARE & MAINTENANCE

A Drummonds' bathroom product is designed to give you years of faultless service and, if you follow the instructions below, will continue to look stunning for many years. All Drummonds' bathroom products are guaranteed for 1 year from the date of purchase against manufacturing defects. The guarantee does not cover faults caused by incorrect installation, neglect, misuse, wear & tear, inappropriate cleaning or damage caused by the build-up of limescale. Please see Drummonds' T&C's for further details of the product guarantee.

GENERAL USE

To help prevent limescale build-up and water marks, all surfaces should be wiped dry after use. Only mild, non-abrasive cleaning products should be used followed by rinsing and drying with a soft cloth.

POLISHED BRASS PRODUCTS

All Drummonds taps and fittings are made from 100% brass, which can be supplied in a polished finish that is not lacquered. Polished brass will tarnish very quickly, especially in the bathroom where it is exposed to moisture. If you wish to maintain a shiny brass finish, regular polishing with an appropriate metal polish such as Brasso will be required.

POLISHED CHROME OR NICKEL PRODUCTS

Wipe off any water marks after use with a soft cloth or towel. Clean on a regular basis with a mild non-abrasive bathroom cleaner, again taking care to dry the product with a soft cloth or towel. For stubborn stains, particularly in hard water areas, remove with Brasso. Nickel products will require periodic polishing with Brasso, otherwise they will develop an aged patina similar to silverware.

SHOWER HEADS AND ROSES

Clean and descale on a regular basis, paying particular attention to the holes in the shower head to ensure that they don't become blocked. Remove and clean the thermostatic cartridge on a periodic basis to prevent permanent damage from limescale.

CAST IRON BATHS AND SHOWER TRAYS

The interior of a Drummonds' bath or shower tray is enameled with dry frit vitreous enamel which is very hardwearing and durable. To maintain the soft shine on the surface of the enamel rinse the bath out after each use, making sure that you get rid of any gritty deposits, and then dry it with a soft cloth or towel. To remove marks or dirt use a non-abrasive bathroom cleaner which is safe for use on enameled surfaces (please see the Vitreous Enamel Association website for guidance on suitable cleaners www.vea.org.uk). It is very important to ensure that a dripping, or leaking, tap is repaired immediately to prevent the enamel being permanently damaged.

BATH EXTERIOR

Caring for the exterior of your bath or shower tray is dependent on the finish of your bath:

- A raw, primed or painted exterior does not require any particular maintenance, other than occasional cleaning to maintain the appearance. If the exterior becomes scratched, exposing the cast iron below, it must be treated immediately with a suitable rust inhibitor, followed by a metal primer and paint finish to seal the exterior.
- A polished and lacquered exterior is a beautiful finish but it must be treated very carefully to avoid scratching especially when moving the bath into position. If the exterior does become scratched, please call Drummonds immediately so that we can advise on the best course of action. In general use the polished exterior should simply be wiped down with a soft cloth. Never use any kind of bathroom cleaner on the exterior of your bath. Care should also be taken when cleaning the floor around the bath, particularly with a skirted bath, not to allow floor cleaner to splash or rub on the bath, as it may damage the lacquer which protects the bath from rusting.

CHINA SANITARYWARE

Clean on a regular basis with a mild, non-abrasive bathroom cleaner to prevent the buildup of dirt and limescale. Ensure that dripping taps are repaired quickly to avoid the surface of the china becoming stained.

MARBLE VANITY BASINS

A Drummonds' marble vanity basin is a natural product which is hand polished and sealed in the factory. Clean the surface of the marble after use with a soft cloth, making sure that you dry the surface to prevent water marks developing on the marble. We would recomment Lithofin Easy Care which is a daily cleaner / conditioner designed for natural stones. under no circumstances use any kind of bathroom cleaner or limescale remover on the surface of the marble. To prevent staining, it is important to ensure that any cosmetics, including shampoo, are wiped off the surface immediately.

WOODEN LOO SEATS

Clean after use with a damp soft (non-abrasive) cloth and dry immediately. Never use a bathroom cleaner on your loo seat as this is likely to strip off the varnish invalidating the guarantee. Use a high quality furniture wax polish occasionally such as Mylands Wax - Natural and apply in accordance with the manufacturers' instructions. Under no circumstance stand on your loo seat. Replace bumpers when perished as these can mark and stain the toilet seat.